VENTING

Technology leads Intelligent life

Technical Manual

High Static Pressure Duct Type

High Static Pressure Duct Type

1. Features 3

2. Specifications 5

3. Dimension 10

4. Piping Diagram 12

5. Wiring Diagram 13

6. Electric characteristics 17

7. Capacity Tables 18

8. Fan performance 20

9. Sound Levels 21

10. Installation 24

11. Exploded View 27

12. Spare parts list 30

1.Features

(1) High External Static Pressure

External static pressure of Indoor Unit can be up to 196Pa, which allows extensive duct work for flexible applications, so the cool air can be delivered to every indoor corner even in a super-high ceiling. The max.distance of air supply is about 14m; the height of air supply is about 6.5m.

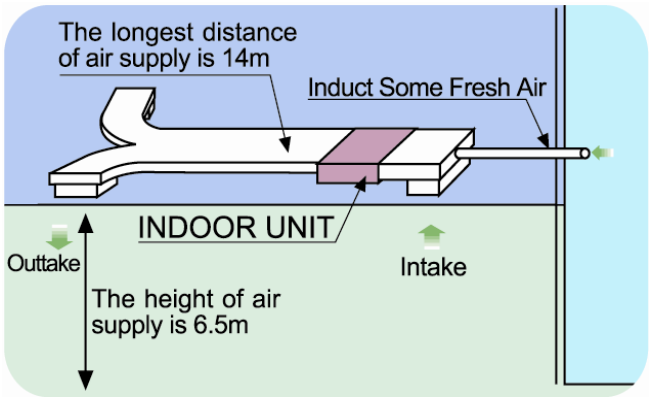

(2) Innovative air supply

The type of air supply and air return was set flexibly and appropriately. It provides homogeneous conditioning of the room temperature.

(3) Conceal design

The unit is installed inside of ceiling, doesn't take room space

(4) Setting or Auto two operation modes

Multi speed wind makes you feel more comfortable;

(5) Auto restart;

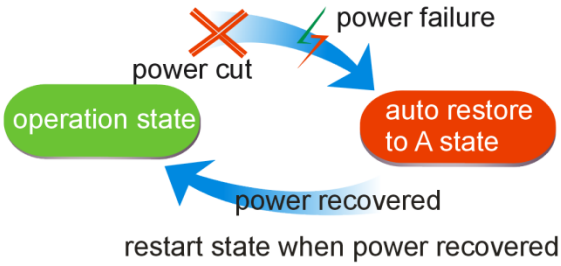

(6) Wired controller and remote controller and central controller can be available

(7) Special insulation design

Achieves high heat insulation efficiency and no condensation on shell

(8) with low ambient temperature cooling function

Makes the unit can run normally on the condition that the ambient temperature falls down to -15℃;

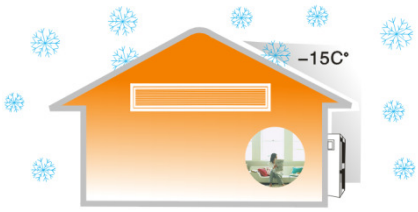

(9) Failure automatic detection

If there is a failure, the indicator will flash and the failure code will display on the wired controller, the failure cause is easier to be found.

(10) Fresh air supply

Fresh air can be drawn in by the Indoor Unit, which can improve the Indoor Air Quality greatly.

(11) High capacity of cooling/heating, efficient, and energy-saving.

(12) It is suitable be used for office, hospital, commercial place and home, the air conditioner will create the comfortable and elegance environment for you.

2.Specifications

Model			ARVHD-H112/4R1A	ARVHD-H125/4R1A
Factory Model			ALHi-H36B4/R1DIB-A	ALHi-H42B4/R1DIB-A
Code			/	/
Power Supply		V~,Hz,Ph	220~240,50,1	220~240,50,1
Capacity	Cooling	kW	11.2	12.5
	Heating	kW	12.8	13.3
Fan Motor	Model		YDF0.8-6	YDF0.8-6
	Brand		HUATE	HUATE
	Output Power	W	200	200
	Capacitor	uF	10	10
	Speed (Hi/Mi/Lo)	r/min	1230/1000/750	1230/1000/750
Coil	Number Of Row		3	3
	Tube Pitch(a)x Row Pitch(b)	mm	22.0×19.05	22.0×19.05
	Fin Pitch	mm	1.6	1.6
	Fin Material		Hydrophilic aluminum fin	Hydrophilic aluminum fin
	Tube Outside Dia.and Material	mm	Φ7.94 Inner grooved	Φ7.94 Inner grooved
	Coil Length x Height x Width	mm	900×352×54.2	900×352×54.2
Unit	Indoor Air Flow (Hi/Mi/Lo)	m^3/h	2000/1600/1400	2000/1600/1400
	Noise Level(Hi/Mi/Lo)	dB(A)	60/57/51	60/57/51
	External Static Pressure	Pa	196	196
	Net Dimension (W×D×H)	mm	1200x719x380	1200x719x380
	Packing Dimension (W×D×H)	mm	1235x760x415	1235x760x415
	Net Weight	Kg	56	56
	Gross Weight	Kg	59	59
Refrigerant Pipe	Liquid Side	mm	9.52	9.52
	Gas Side	mm	19.05	19.05
	Drainage	mm	R3/4（DN20）	R3/4（DN20）
Operation Temperature Range		℃	16~32	16~32
Ambient Temperature Range(Cooling/Heating)		℃	-15~52/-20~29	-15~52/-20~29
Application Area		m^2	50~75	50~90
Stuffing Quantity	20/40/40H	Unit	64/140/168	64/140/168

Notes:

1. Cooling Capacity:Indoor temp.27℃DB,19℃WB,outdoor temp.35℃DB,24℃WB /Equivalent piping length :7.5m,level difference : 0 m.
2. Heating Capacity:Indoor temp.20℃DB, outdoor temp.7℃DB,6℃WB /Equivalent piping length :7.5m,level difference : 0 m.
3. Anechoic chamber conversion value,measured in test room.During actual operation.These values are normally somewhat higher as a result of ambient conditions.
4. All the above specification will be changed due to product performance improvement. AUX reserves the right to change product design without prior notice, everything should subject to parameter on nameplate.

Model			ARVHD-H140/4R1A	ARVHD-H150/4R1A
Factory Model			ALHi-H48A4/R1DIB-A	ALHi-H60A4/R1DIB-A
Code			/	/
Power Supply		V~,Hz,Ph	220~240,50,1	220~240,50,1
Capacity	Cooling	kW	14.0	15.0
	Heating	kW	15.0	16.0
Fan Motor	Model		YDK200-4	YDK200-4
	Brand		HUATE	HUATE
	Output Power	W	200	200
	Capacitor	uF	10	10
	Speed (Hi/Mi/Lo)	r/min	1230/1000/750	1230/1000/750
Coil	Number Of Row		3	3
	Tube Pitch(a)x Row Pitch(b)	mm	22.0×19.05	22.0×19.05
	Fin Pitch	mm	1.6	1.6
	Fin Material		Hydrophilic aluminum fin	Hydrophilic aluminum fin
	Tube Outside Dia.and Material	mm	Φ7.94 Inner grooved	Φ7.94 Inner grooved
	Coil Length x Height x Width	mm	900×352×54.2	900×352×54.2
Unit	Indoor Air Flow (Hi/Mi/Lo)	m^3/h	2000/1600/1400	2000/1600/1400
	Noise Level(Hi/Mi/Lo)	dB(A)	60/57/51	60/57/51
	External Static Pressure	Pa	196	196
	Net Dimension (W×D×H)	mm	1200x719x380	1200x719x380
	Packing Dimension (W×D×H)	mm	1235x760x415	1235x760x415
	Net Weight	Kg	56	56
	Gross Weight	Kg	59	59
Refrigerant Pipe	Liquid Side	mm	9.52	9.52
	Gas Side	mm	19.05	19.05
	Drainage	mm	R3/4in(DN20)	R3/4in(DN20)
Operation Temperature Range		℃	16~32	16~32
Ambient Temperature Range(Cooling/Heating)		℃	-15~52/-20~29	-15~52/-20~29
Application Area		m^2	60~100	65~110
Stuffing Quantity	20/40/40H	Unit	65/140/168	65/140/168

Notes:

1. Cooling Capacity:Indoor temp.27℃DB,19℃WB,outdoor temp.35℃DB,24℃WB /Equivalent piping length :7.5m,level difference : 0 m.
2. Heating Capacity:Indoor temp.20℃DB, outdoor temp.7℃DB,6℃WB /Equivalent piping length :7.5m,level difference : 0 m.
3. Anechoic chamber conversion value,measured in test room.During actual operation.These values are normally somewhat higher as a result of ambient conditions.
4. All the above specification will be changed due to product performance improvement. AUX reserves the right to change product design without prior notice, everything should subject to parameter on nameplate.

Model			ARVHD-H220/4R1A	ARVHD-H280/4R1A
Factory Model			ALHi-H80A4/R1DIB-A	ALHi-H100A4/R1DIB-A
Code			/	/
Power Supply		V~,Hz,Ph	220~240,50,1	220~240,50,1
Capacity	Cooling	kW	22.0	28.0
	Heating	kW	24.5	31.0
Fan Motor	Model		YF139-300-4A	YF139-300-4A
	Brand		Yilida	Yilida
	Output Power	W	300	300
	Capacitor	uF	10	10
	Speed (Hi/Mi/Lo)	r/min	1285/1217/1108	1285/1217/1108
Coil	Number Of Row		3	3
	Tube Pitch(a)x Row Pitch(b)	mm	25.4×22.0	25.4×22.0
	Fin Pitch	mm	1.8	1.8
	Fin Material		Hydrophilic aluminum fin	Hydrophilic aluminum fin
	Tube Outside Dia.and Material	mm	Φ9.52 Inner grooved	Φ9.52 Inner grooved
	Coil Length x Height x Width	mm	1435×457×66	1435×457×66
Unit	Indoor Air Flow (Hi/Mi/Lo)	m^3/h	4000/3200/2600	4000/3200/2600
	Noise Level(Hi/Mi/Lo)	dB(A)	60/55/53	60/56/54
	External Static Pressure	Pa	220	220
	Net Dimension (W×D×H)	mm	1755×915×645	1755×915×645
	Packing Dimension (W×D×H)	mm	1890×990×840	1890×990×840
	Net Weight	Kg	130	130
	Gross Weight	Kg	150	150
Refrigerant Pipe	Liquid Side	mm	9.52	9.52
	Gas Side	mm	19.05	19.05
	Drainage	mm	R1/1in(DN25)	R1/1in(DN25)
Operation Temperature Range		℃	16~32	16~32
Ambient Temperature Range(Cooling/Heating)		℃	-5~52/-20~24	-5~52/-20~24
Application Area		m^2	60~100	65~110
Stuffing Quantity	20/40/40H	Unit	68/147/168	68/147/168

Notes:

1. Cooling Capacity:Indoor temp.27℃DB,19℃WB,outdoor temp.35℃DB,24℃WB /Equivalent piping length :7.5m,level difference : 0 m.
2. Heating Capacity:Indoor temp.20℃DB, outdoor temp.7℃DB,6℃WB /Equivalent piping length :7.5m,level difference : 0 m.
3. Anechoic chamber conversion value,measured in test room.During actual operation.These values are normally somewhat higher as a result of ambient conditions.
4. All the above specification will be changed due to product performance improvement. AUX reserves the right to change product design without prior notice, everything should subject to parameter on nameplate.

Model			ARVHD-H450/5R1A	ARVHD-H560/5R1A
Factory Model			ALHi-H160A5/R1DIB-A	ALHi-H185B5/R1DIB-A
Code			/	/
Power Supply		V~,Hz,Ph	380~415,50,3	380~415,50,3
Capacity	Cooling	kW	45.0	56.0
	Heating	kW	49.5	61.5
Fan Motor	Model		KT11-45No3.25AII0.8KW-6	KT11-45No3.25AII0.8KW-6
	Brand		Nantai	Nantai
	Output Power	W	800	800
	Capacitor	uF	/	/
	Speed (Hi/Mi/Lo)	r/min	900	900
Coil	Number Of Row		3	3
	Tube Pitch(a)x Row Pitch(b)	mm	25.4×22.0	25.4×22.0
	Fin Pitch	mm	1.8	1.8
	Fin Material		Hydrophilic aluminum fin	Hydrophilic aluminum fin
	Tube Outside Dia.and Material	mm	Φ9.52 Inner grooved	Φ9.52 Inner grooved
	Coil Length x Height x Width	mm	1800×762×66	1800×762×66
Unit	Indoor Air Flow (Hi/Mi/Lo)	m^3/h	8000	8000
	Noise Level(Hi/Mi/Lo)	dB(A)	63	63
	External Static Pressure	Pa	200	200
	Net Dimension (W×D×H)	mm	2115×990×855	2115×990×855
	Packing Dimension (W×D×H)	mm	2225×1025×1015	2225×1025×1015
	Net Weight	Kg	225	225
	Gross Weight	Kg	260	260
Refrigerant Pipe	Liquid Side	mm	12.7	12.7
	Gas Side	mm	22.2	22.2
	Drainage	mm	R1/1in(DN25)	R1/1in(DN25)
Operation Temperature Range		℃	16~32	16~32
Ambient Temperature Range(Cooling/Heating)		℃	-15~52/-20~29	-15~52/-20~29
Application Area		m^2	60~100	65~110
Stuffing Quantity	20/40/40H	Unit	10/22/22	10/22/22

Notes:

1. Cooling Capacity:Indoor temp.27℃DB,19℃WB,outdoor temp.35℃DB,24℃WB /Equivalent piping length :7.5m,level difference : 0 m.
2. Heating Capacity:Indoor temp.20℃DB, outdoor temp.7℃DB,6℃WB /Equivalent piping length :7.5m,level difference : 0 m.
3. Anechoic chamber conversion value,measured in test room.During actual operation.These values are normally somewhat higher as a result of ambient conditions.
4. All the above specification will be changed due to product performance improvement. AUX reserves the right to change product design without prior notice, everything should subject to parameter on nameplate.

Model			ARVHD-H220/4R1B	ARVHD-H280/4R1B
Factory Model			ALHi-H80A4/R1DIB-B	ALHi-H100A4/R1DIB-B
Code			/	/
Power Supply		V~,Hz,Ph	220~240,50,1	220~240,50,1
Capacity	Cooling	kW	22.4	28.0
	Heating	kW	25	31.5
Fan Motor	Model		FP380A	FP380A
	Brand		Yilida	Yilida
	Output Power	W	380	380
	Capacitor	uF	15	15
	Speed (Hi/Mi/Lo)	r/min	1290/1200/1140	1290/1200/1140
Coil	Number Of Row		4	4
	Tube Pitch(a)x Row Pitch(b)	mm	20.5×12.7	20.5×12.7
	Fin Pitch	mm	1.5	1.5
	Fin Material		Hydrophilic aluminum fin	Hydrophilic aluminum fin
	Tube Outside Dia.and Material	mm	Φ7.94 Inner grooved	Φ7.94 Inner grooved
	Coil Length x Height x Width	mm	1180×369×54	1180×369×54
Unit	Indoor Air Flow (Hi/Mi/Lo)	m^3/h	4000/3200/2600	4000/3200/2600
	Noise Level(Hi/Mi/Lo)	dB(A)	55/54/53	55/54/53
	External Static Pressure	Pa	220	220
	Net Dimension (W×D×H)	mm	1350×700×460	1350×700×460
	Packing Dimension (W×D×H)	mm	1540×810×610	1540×810×610
	Net Weight	Kg	91	91
	Gross Weight	Kg	110	110
Refrigerant Pipe	Liquid Side	mm	12.7	12.7
	Gas Side	mm	22.2	22.2
	Drainage	mm	2-Φ33.5/	2-Φ33.5/
Operation Temperature Range		℃	16~32	16~32
Ambient Temperature Range(Cooling/Heating)		℃	-5~52/-20~24	-5~52/-20~24
Application Area		m^2	60~100	65~110
Stuffing Quantity	20/40/40H	Unit	68/139/153	68/139/153

Notes:

1. 1.Cooling Capacity:Indoor temp.27℃DB,19℃WB,outdoor temp.35℃DB,24℃WB /Equivalent piping length :7.5m,level difference : 0 m.
2. 2.Heating Capacity:Indoor temp.20℃DB, outdoor temp.7℃DB,6℃WB /Equivalent piping length :7.5m,level difference : 0 m.
3. 3.Anechoic chamber conversion value,measured in test room.During actual operation.These values are normally somewhat higher as a result of ambient conditions.
4. 4.All the above specification will be changed due to product performance improvement. AUX reserves the right to change product design without prior notice, everything should subject to parameter on nameplate.

3.Dimension

ARVHD-H112/4R1A, ARVHD-H125/4R1A, ARVHD-H140/4R1A, ARVHD-H150/4R1A

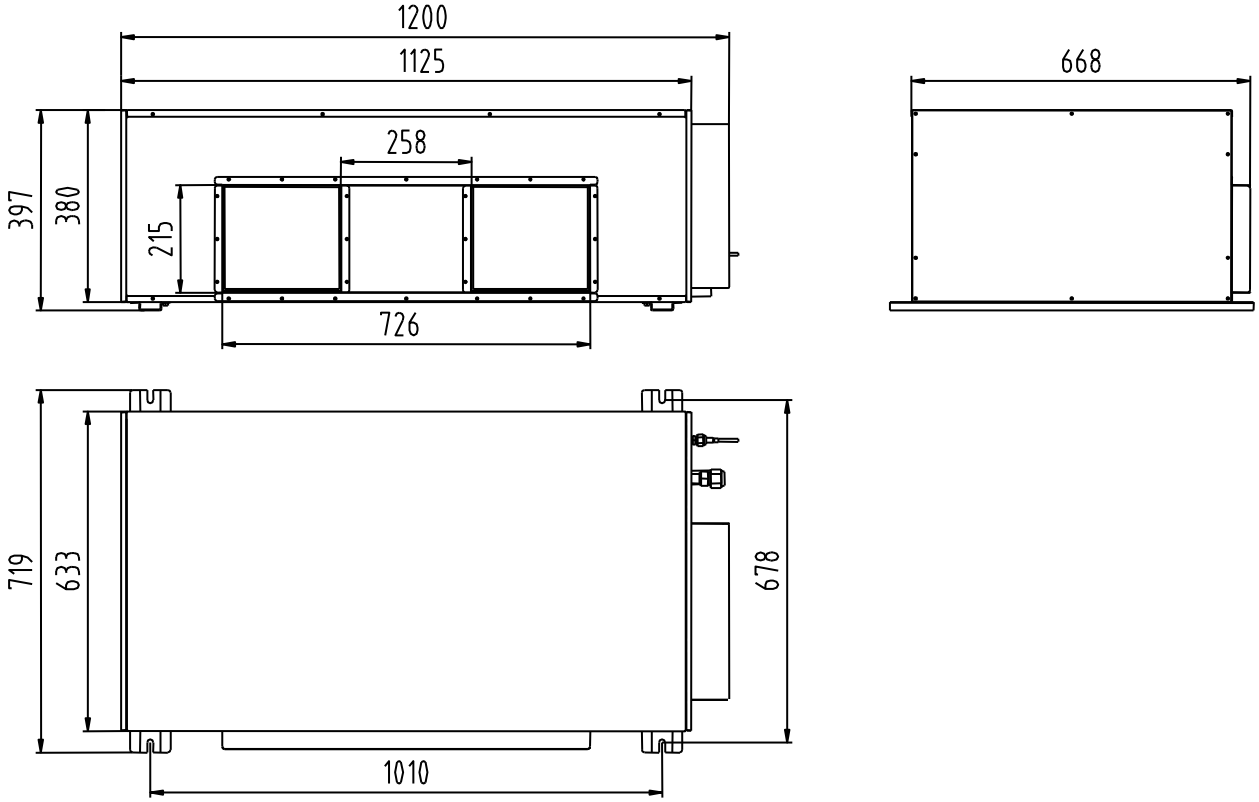

ARVHD-H220/4R1A, ARVHD-H280/4R1A

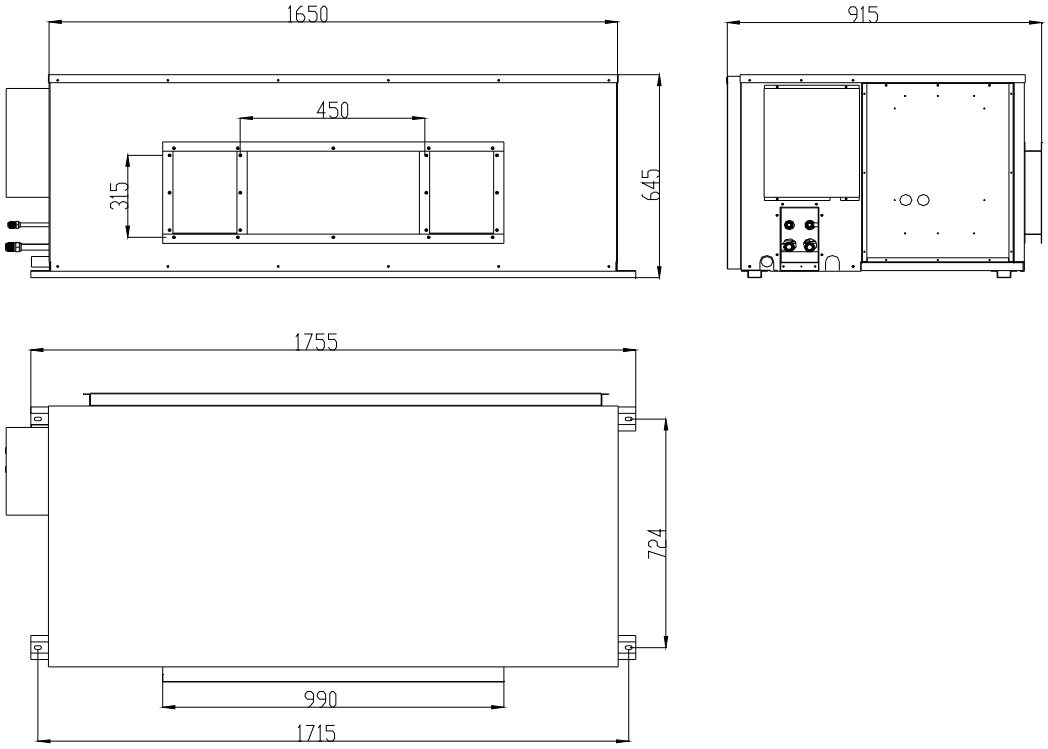

ARVHD-H450/5R1A, ARVHD-H560/5R1A

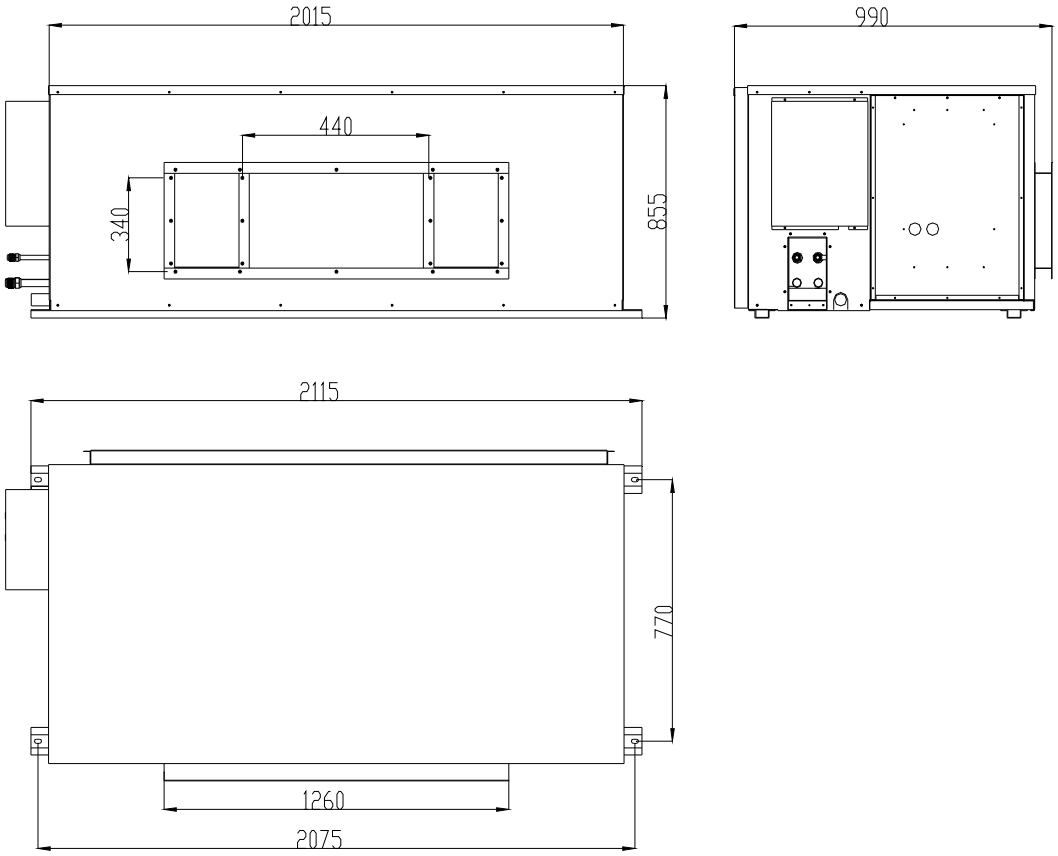

ARVHD-H220/4R1B ,ARVHD-H280/4R1B

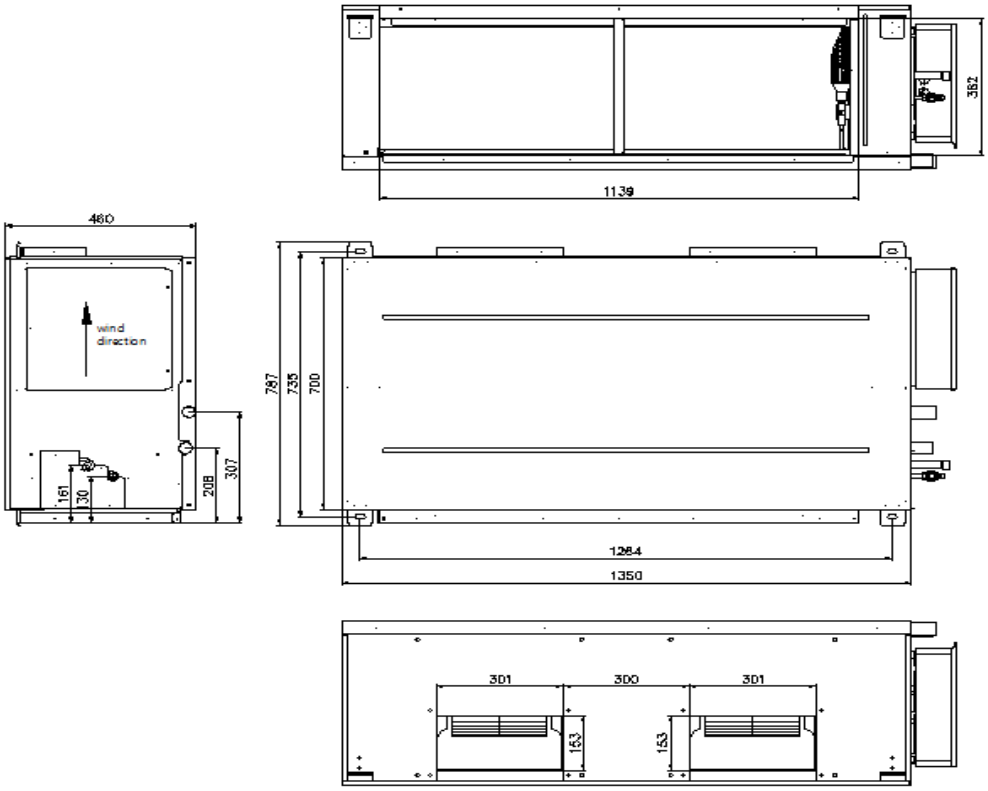

4.Piping Diagram

ARVHD-H112/4R1A, ARVHD-H125/4R1A, ARVHD-H140/4R1A, ARVHD-H150/4R1A

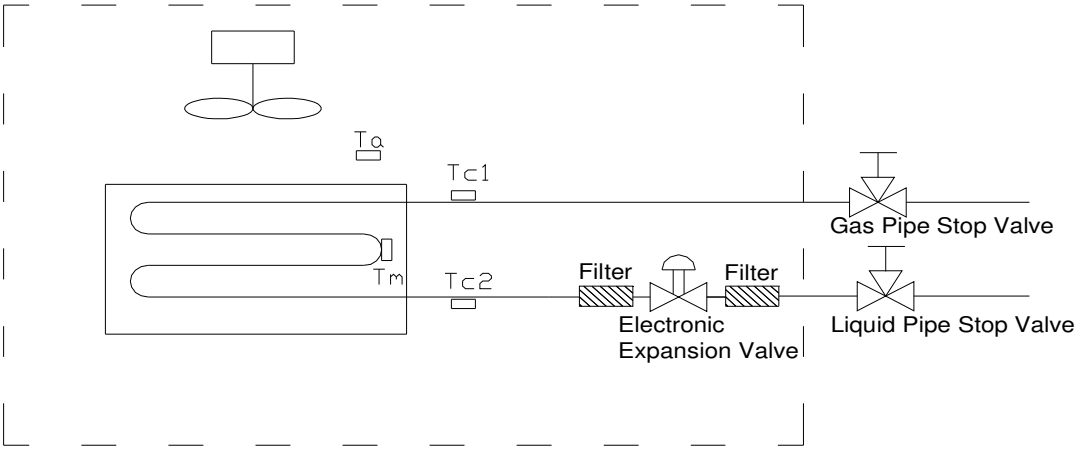

ARVHD-H220/4R1A, ARVHD-H280/4R1A, ARVHD-H450/5R1A, ARVHD-H560/5R1A

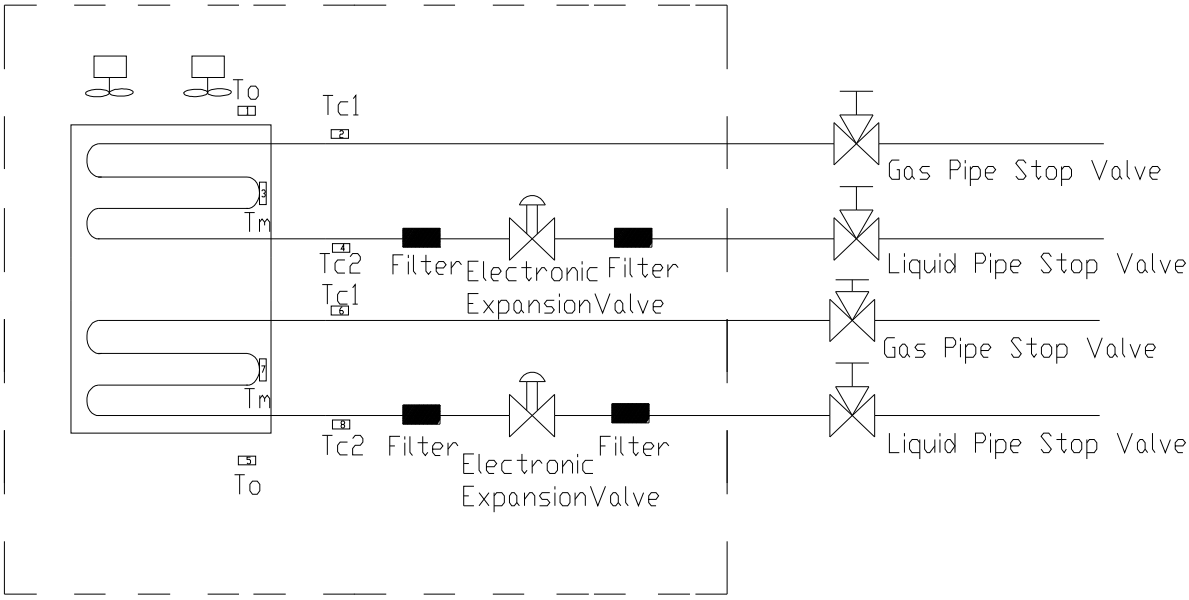

Refrigerant pipe connection port diameters

(mm)

model	Gas	Liquid
ARVHD-H112/125/140/150/220/280/4R1A	**Φ**19.05	**Φ**9.52
ARVHD-H450/560/5R1A	**Φ**22.2	**Φ**12.7
ARVHD-H220/280/4R1B	**Φ22.2**	**Φ12.7**

5.Wiring Diagram

ARVHD-H112/4R1A, ARVHD-H125/4R1A, ARVHD-H140/4R1A, ARVHD-H150/4R1A

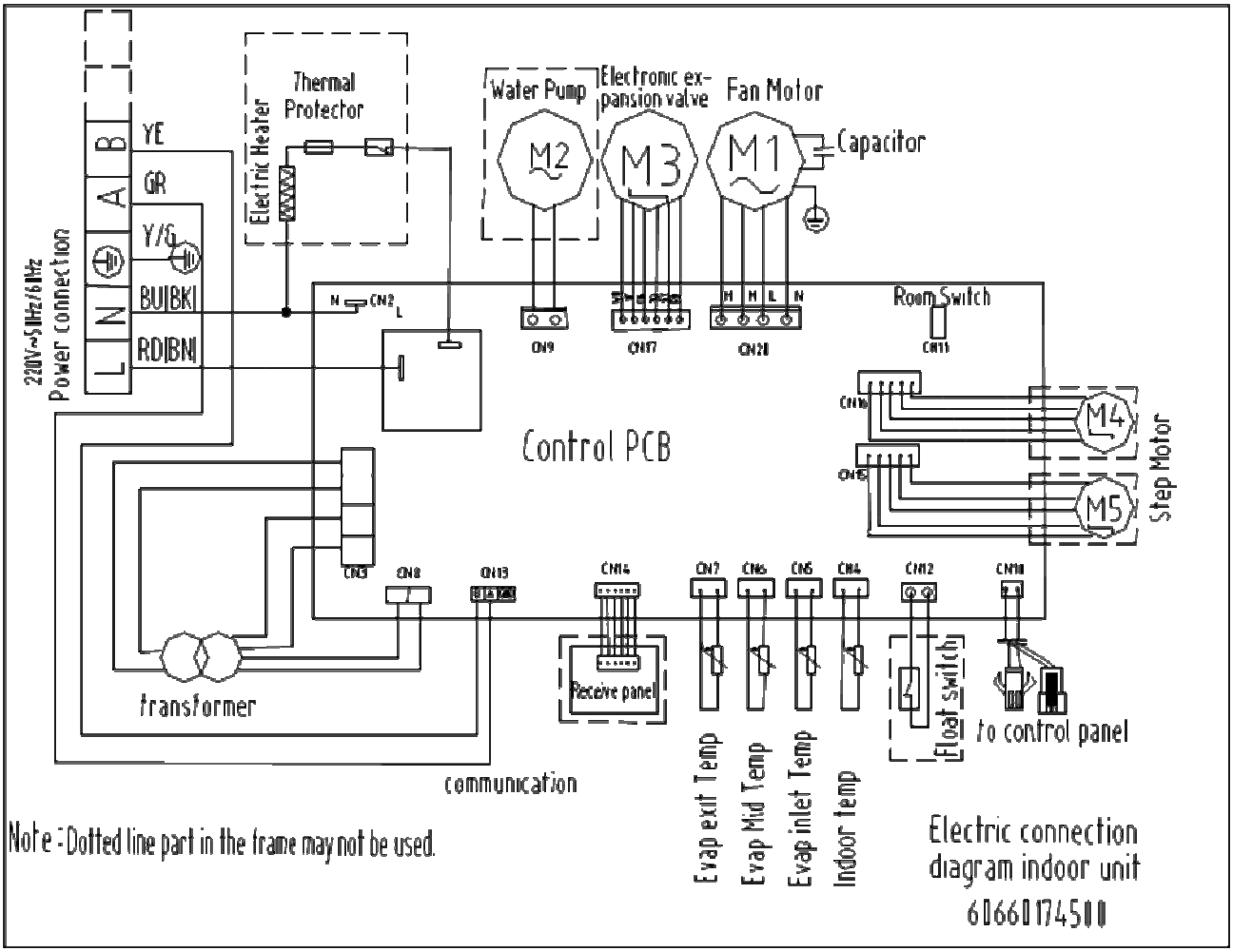

ARVHD-H220/4R1A, ARVHD-H280/4R1A

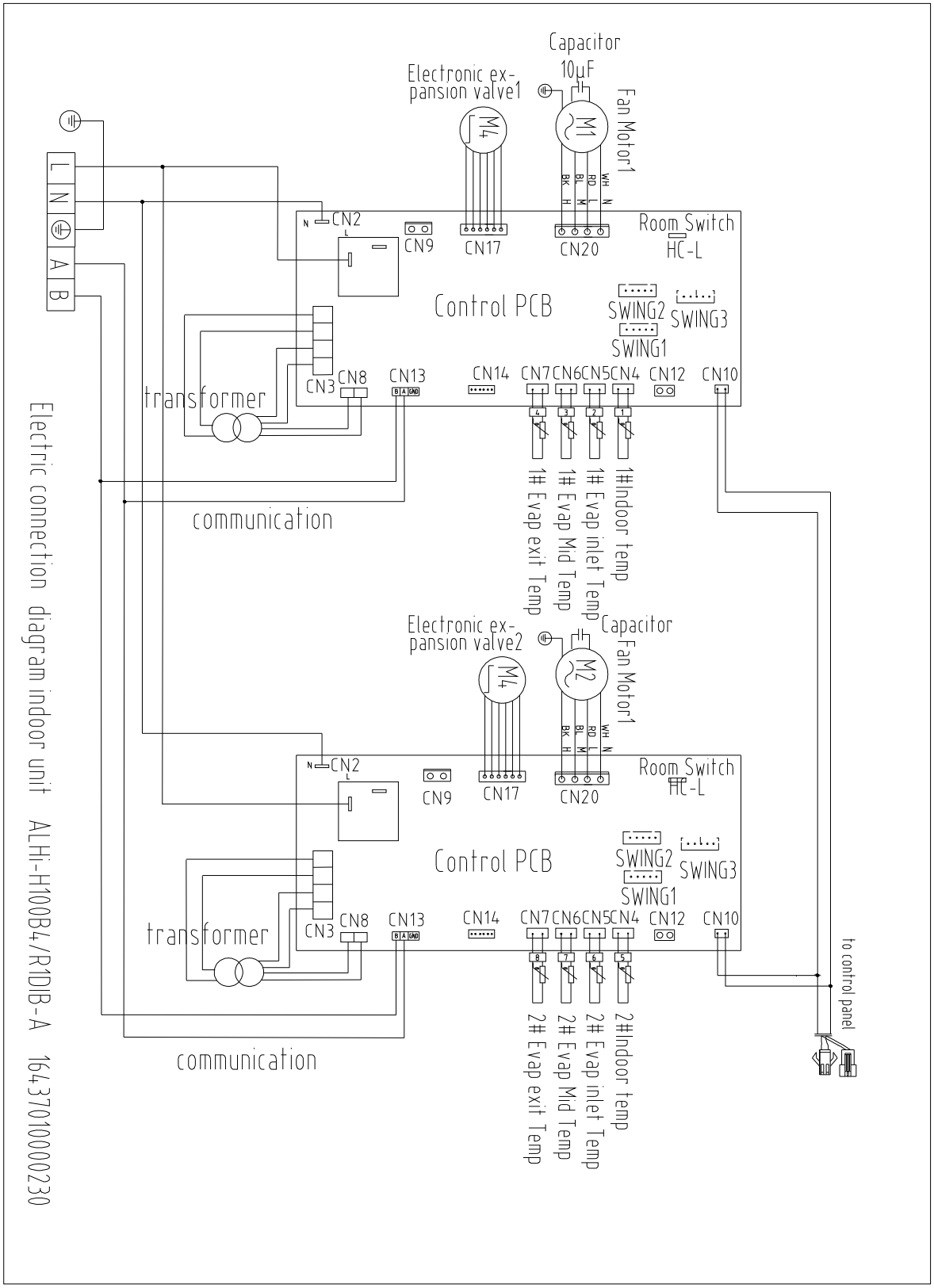

ARVHD-H450/5R1A, ARVHD-H560/5R1A

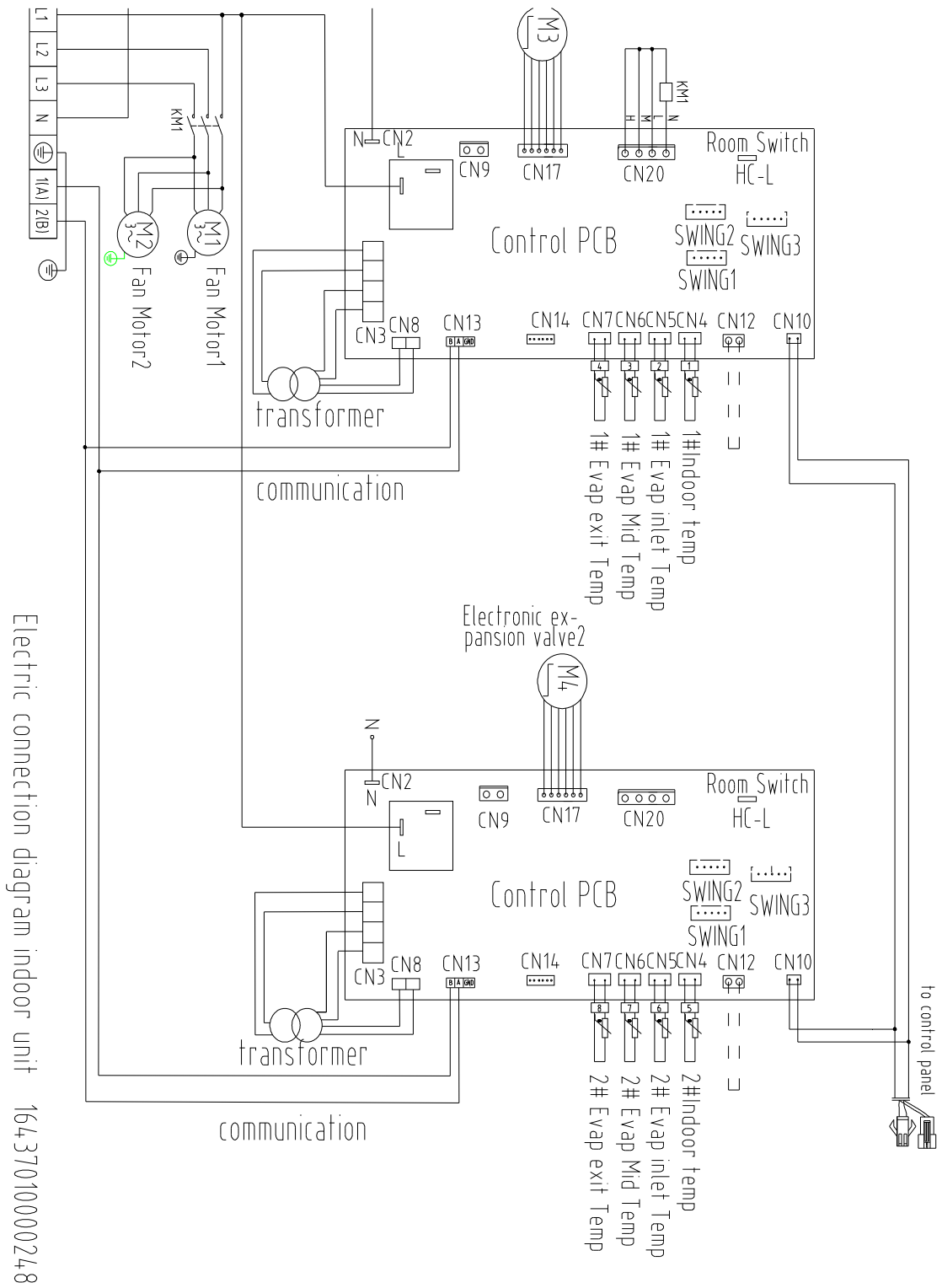

ARVHD-H220/4R1B ,ARVHD-H280/4R1B

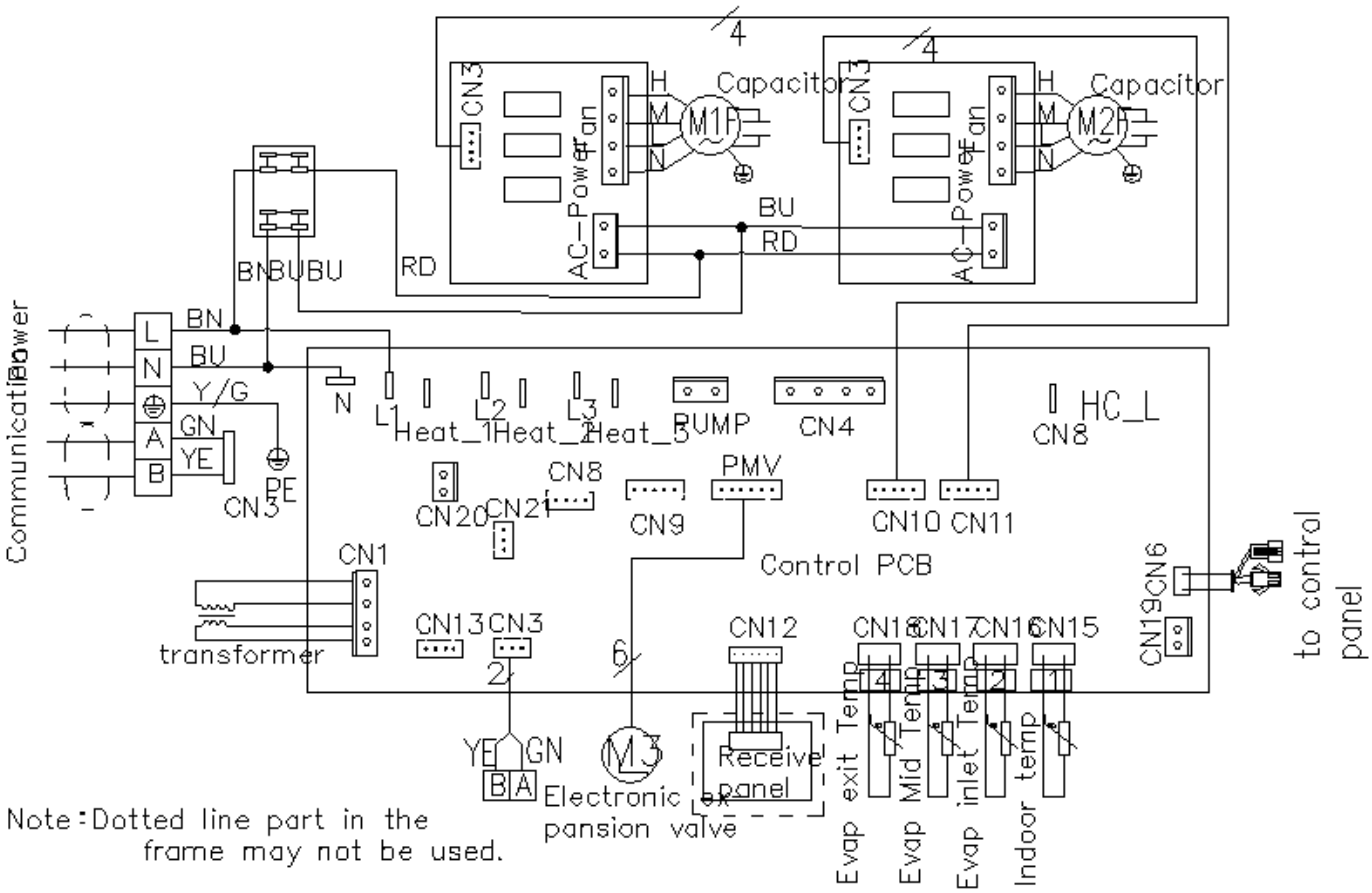

6.Electric characteristics

Units					Power supply		IFM	
Model	Hz	Volts	Min	Max	MCA	MFA	KW	FLA
ARVHD-H112/4R1A	50	220-240	198	264	5.5	30	0.4	4.4
ARVHD-H125/4R1A	50	220-240	198	264	5.5	30	0.4	4.4
ARVHD-H140/4R1A	50	220-240	198	264	5.5	30	0.4	4.4
ARVHD-H150/4R1A	50	220-240	198	264	5.5	30	0.4	4.4
ARVHD-H220/4R1A	50	220-240	198	264	9.3	30	0.6	7.4
ARVHD-H280/4R1A	50	220-240	198	264	9.3	30	0.6	7.4
ARVHD-H450/5R1A	50	380-415	342	418	5.8	30	1.6	4.6
ARVHD-H560/5R1A	50	380-415	342	418	5.8	30	1.6	4.6
.ARVHD-H220/4R1B	50	220-240	198	264	3.7	16	0.64	6.3
ARVHD-H280/4R1B	50	220-240	198	264	3.7	16	0.64	6.3

Symbols:
MCA: Min. Circuit Amps (A)
MFA: Max. Circuit BreakerAmps
KW: Fan Motor Rated Output(kW)
FLA: Full Load Amps (A)
IFM:Indoor Fan Motor

Note:

1. Min. and Max. Voltage:Units are suitable for use on electrical system where voltage supplied to unit terminals is not below or above listed rang limits.
2. Maximum allowable voltage unbalance between phases is 2%.
3. MCA =1.25 x FLA

Select wire size based on the MCA.

7.Capacity Tables

Cooling Capacity of Outdoor Dry Bulb Temperature and Indoor Dry/Wet Bulb Temperature or Power Consumption Correction Coefficient

Outdoor dry bulb temperature [^{0}C]	Correction coefficient	Indoor dry/wet bulb temperature [^{0}C]				
		22/15	24/17	27/19	29/21	32/23
-15～20	Cooling capacity	80 - 110 % of nominal				
	Power	25 - 50 % of nominal				
25	Cooling capacity	0.97	1.03	1.10	1.16	1.22
	Power	0.78	0.79	0.81	0.82	0.84
30	Cooling capacity	0.92	0.98	1.05	1.11	1.17
	Power	0.88	0.89	0.91	0.92	0.93
35	Cooling capacity	0.87	0.94	1.0	1.06	1.13
	Power	0.96	0.97	1.0	1.01	1.03
40	Cooling capacity	0.83	0.89	0.95	1.02	1.08
	Power	1.05	1.07	1.08	1.09	1.11
45	Cooling capacity	0.77	0.84	0.90	0.96	1.02
	Power	1.16	1.18	1.19	1.2	1.23
50	Cooling capacity	0.75	0.80	0.86	0.91	0.98
	Power	1.24	1.27	1.28	1.3	1.32

Heating Capacity of Outdoor Dry/Wet Bulb Temperature and Indoor Dry Bulb Temperature or Power Consumption Correction Coefficient

Outdoor ambient temperature of dry/wet bulb[^{0}C]	capacity/power correction	Indoor back temperature of dry bulb [^{0}C]		
		15	**20**	**25**
-20/-21	Heating capacity	0.58	0.53	0.49
	Power	0.50	0.56	0.62
-15/-16	Heating capacity	0.64	0.59	0.55
	Power	0.60	0.66	0.72
-10/-12	Heating capacity	0.71	0.66	0.62
	Power	0.72	0.78	0.84
-7/-8	Heating capacity	0.76	0.72	0.67
	Power	0.81	0.87	0.93
-1/-2	Heating capacity	0.79	0.74	0.70
	Power	0.86	0.92	0.98
2/1	Heating capacity	0.81	0.76	0.72
	Power	0.89	0.95	1.01
7/6	Heating capacity	1.04	1.0	0.96
	Power	0.94	1.0	1.06
10/9	Heating capacity	1.1	1.06	1.01
	Power	0.99	1.05	1.11
15/12	Heating capacity	1.16	1.12	1.07
	Power	1.05	1.11	1.17
15-24	Heating capacity	0.85 – 1.05 of nominal		
	Power	0.80 – 1.20 of nominal		

Length Correction Coefficient of Indoor/Outdoor Unit Connecting Tube

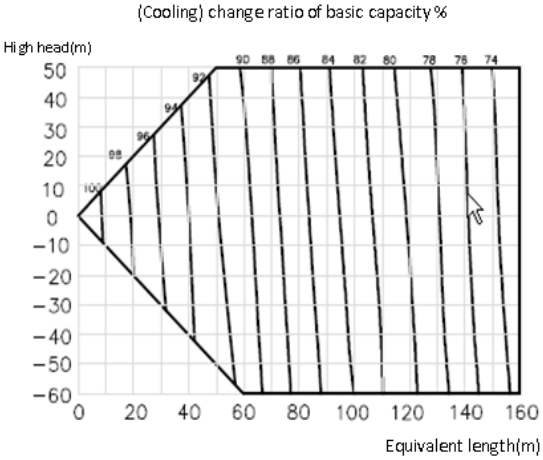

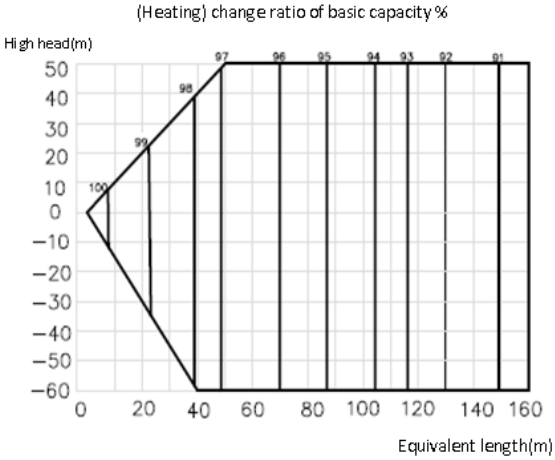

Positive side of high head means installation height of outdoor unit should be higher than indoor unit; negative side of high head means installation height of outdoor unit should be lower than indoor unit; (change ratio of basic capacity)

8.Fan performance

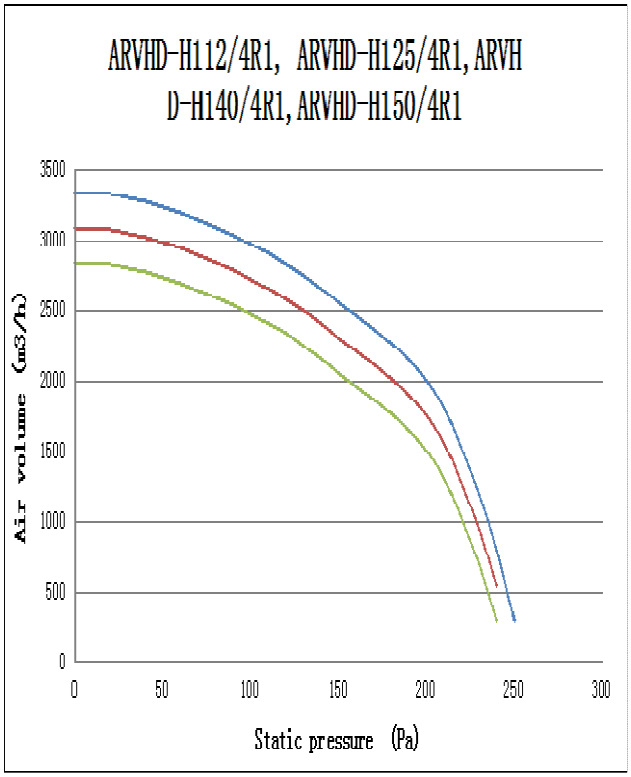

ARVHD-H112/4R1A, ARVHD-H125/4R1A, ARVHD-H140/4R1A, ARVHD-H150/4R1A			
Static Pressure	Air Volume(m^3/h)		
(Pa)	High	Mid	Low
0	3345	3095	2845
10	3340	3090	2840
20	3330	3080	2830
30	3310	3060	2810
40	3280	3030	2780
50	3240	2990	2740
60	3200	2950	2700
70	3150	2900	2650
80	3100	2850	2600
90	3040	2790	2540
100	2980	2730	2480
110	2910	2660	2410
120	2840	2590	2340
130	2760	2510	2260
140	2665	2415	2165
150	2560	2310	2060
160	2470	2220	1970
170	2370	2120	1870
180	2270	2020	1770
190	2150	1900	1650
200	2000	1750	1500
210	1800	1550	1300
220	1500	1250	1000
230	1200	950	700
240	800	550	300
250	300	/	/

Warning !

In order to ensure the use reliability of the wind turbine, the requirements set in installation and use of static pressure in the range of 120-220Pa. The data curve as follows:

ARVHD-H220/4R1A, ARVHD-H280/4R1A		
Static Pressure	Air Volume	FLA
(Pa)	m3/h	A
0	4927	7.25
10	4885	7.10
20	4832	7.01
30	4789	6.96
40	4741	6.87
50	4734	6.69
60	4728	6.59
70	4682	6.52
80	4618	6.45
90	4574	6.35
100	4521	6.30
110	4479	6.23
120	4404	6.13
130	4371	6.07
140	4287	5.97
150	4233	5.89
160	4148	5.78
170	4084	5.68
180	3991	5.58
190	3938	5.51
200	3856	5.41
210	3814	5.30
220	3780	5.21
230	3742	5.10
240	3701	5.01
250	3656	4.89

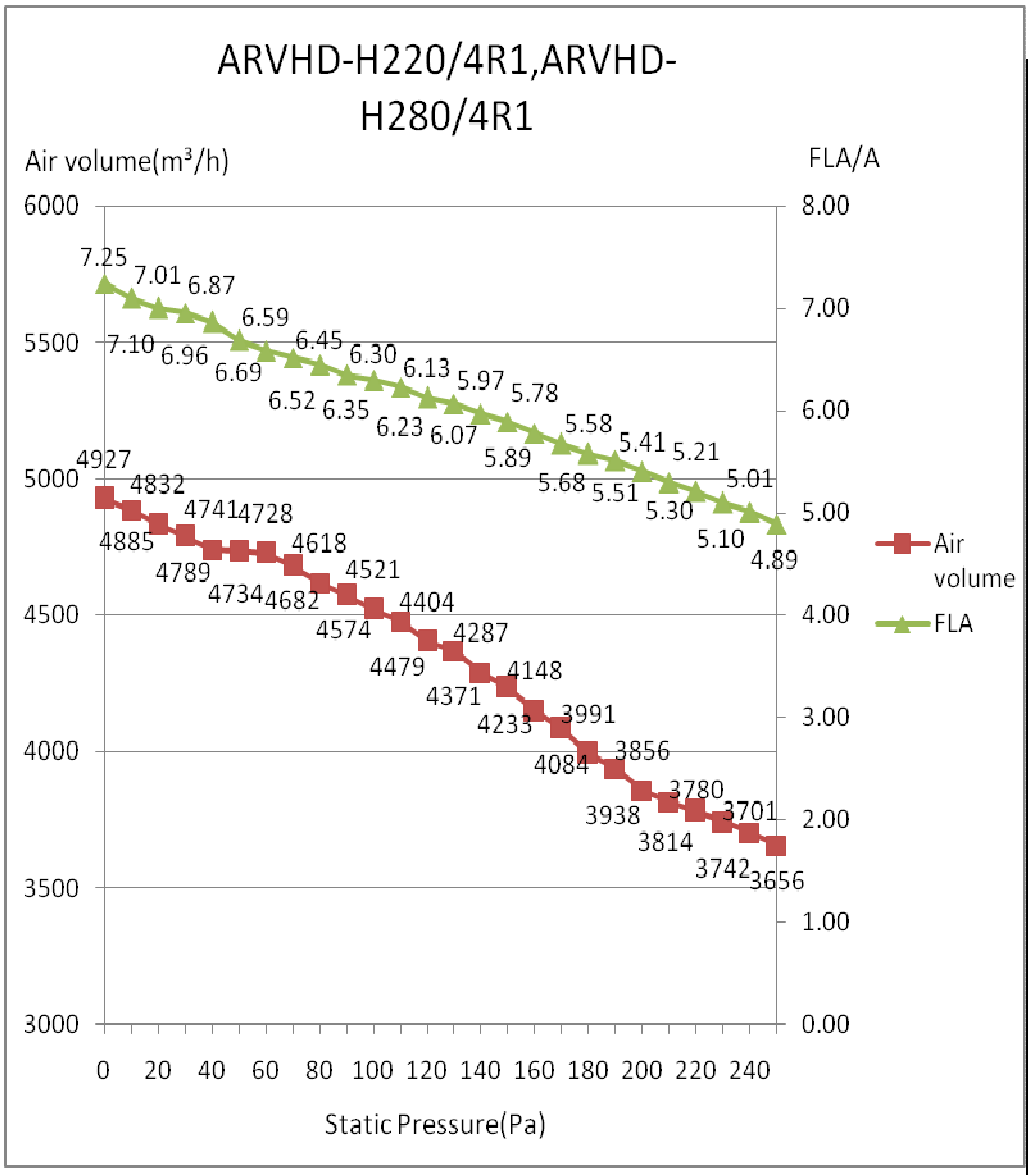

ARVHD-H450/5R1A ARVHD-H560/5R1A		
Static Pressure	Air Volume	FLA
Pa	m³/h	A
0	11537	5.11
10	11416	5.07
20	11286	5.02
30	11154	4.97
40	11013	4.91
50	10883	4.87
60	10735	4.82
70	10610	4.77
80	10410	4.72
90	10279	4.68
100	10149	4.63
110	10011	4.59
120	9822	4.54
130	9681	4.47
140	9486	4.41
150	9333	4.34
160	9099	4.29
170	8920	4.23
180	8730	4.18
190	8553	4.12
200	8323	4.06

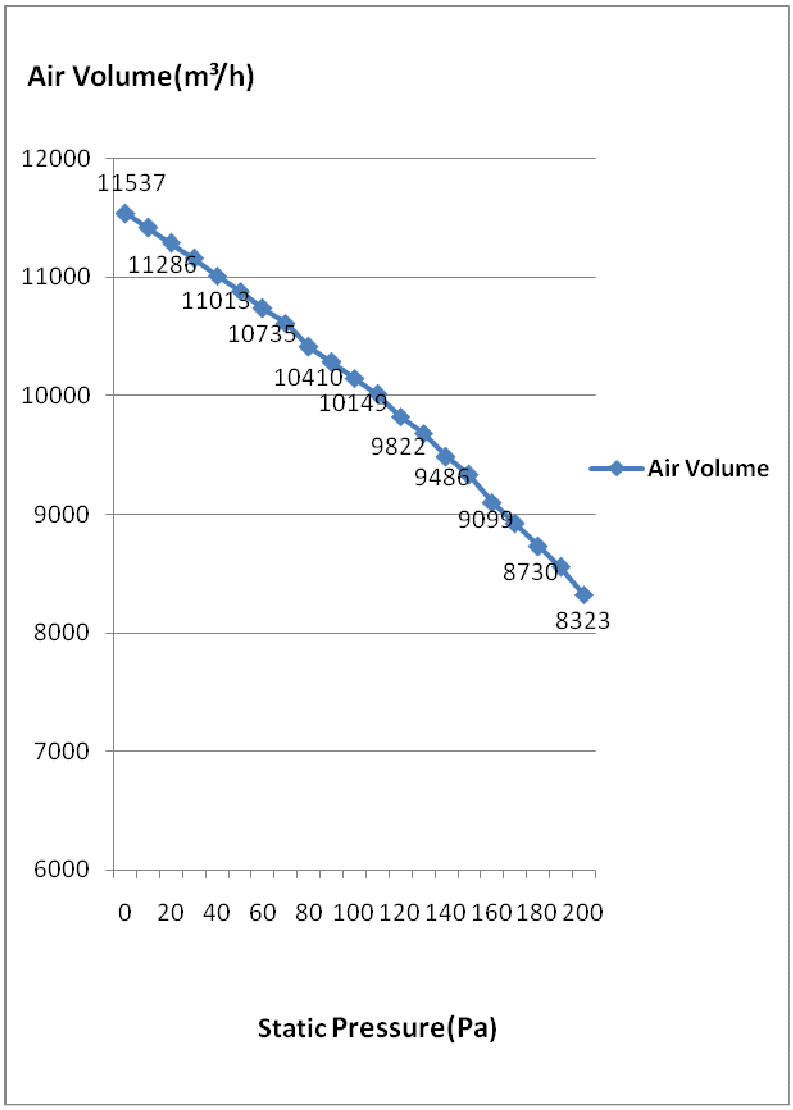

ARVHD-H220/4R1B ARVHD-H280/4R1B			
Static Pressure	Air Volume m³/h		
Pa	High	Mid	Low
150	4771	3988	3291
180	4558	3827	3145
200	4409	3681	3052
220	4225	3559	2940
250	4001	3317	2699
300	3515	2795	2297

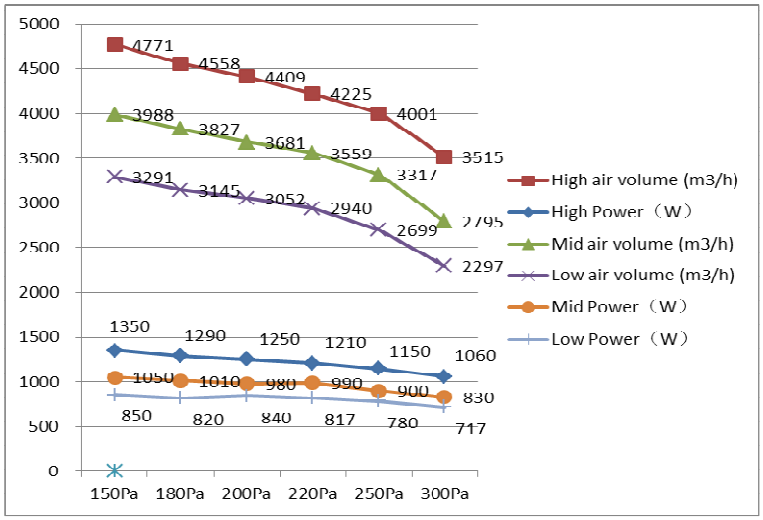

9.Sound Levels

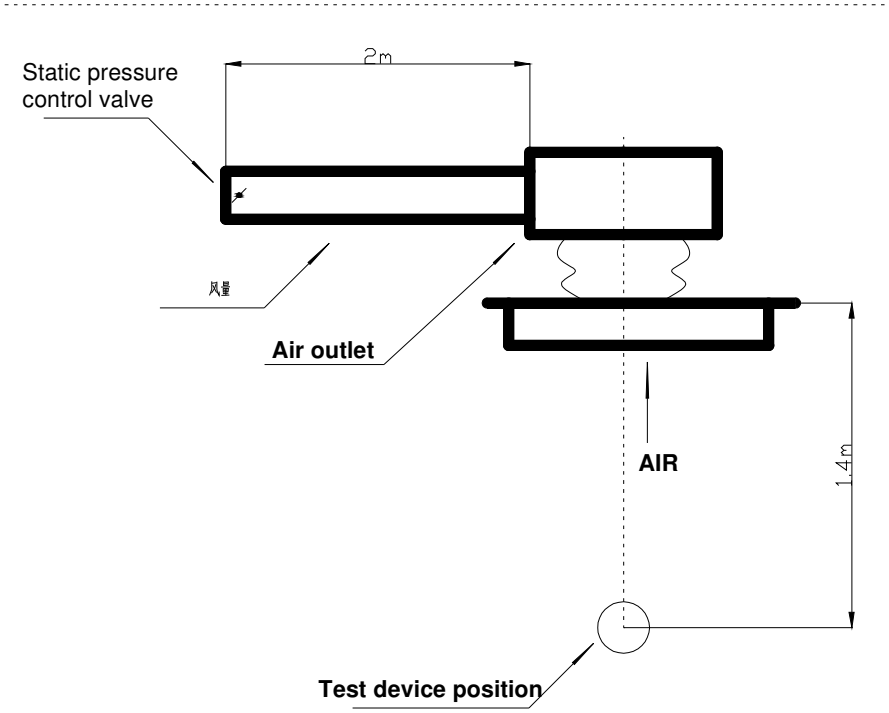

Note:

1. The operating condition are assumed to be atandard(JIS Condition).
2. These operating values were obtained in a dead room (conversion values).

Sound level will vary depending on a range of factors such as the construction (acoustic absorption coetficient) of the particular room in which the equipments installed.

Model	**220~240V 50Hz**		
	H	M	L
ARVHD-H112/4R1A	60	57	51
ARVHD-H125/4R1A	60	57	51
ARVHD-H140/4R1A	60	57	51
ARVHD-H150/4R1A	60	57	51
ARVHD-H220/4R1A	60	55	53
ARVHD-H280/4R1A	60	56	54
ARVHD-H220/4R1B	55	54	53
ARVHD-H280/4R1B	55	54	53
Model	**380~415V 50Hz**		
ARVHD-H450/5R1A	63		
ARVHD-H560/5R1A	63		

10.Installation

10.1 The distance between indoor unit and obstacle

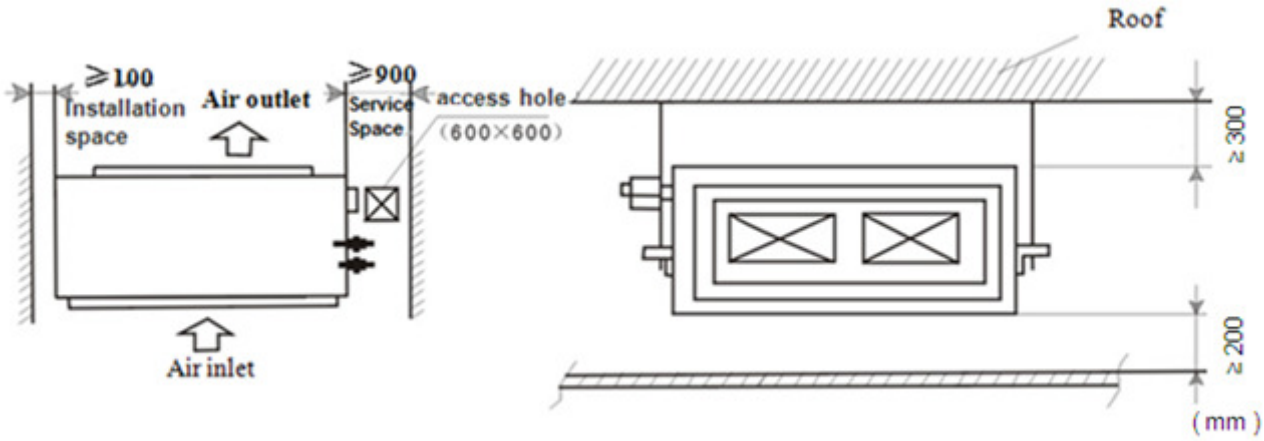

10.2 Suspension unit

◇Select the suspension foundation

The suspension foundation is a structure of either wooden frame orreinforced concrete. It must be firm and reliable to bear at least 4 times weight of itself and capable of bearing vibration for long periods;

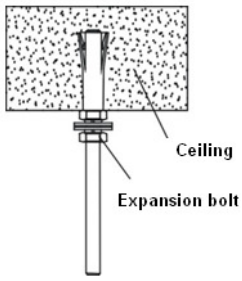

◇Fixing of suspension foundation

Fix the suspension bolts either as shown in the picture or by a steel or wooden bracket;

◇Adjust the relative positions of the suspension hooks to ensure the indoor unit is level in all directions. Use a spirit level to ensure this, otherwise water leakage, air leakage etc. will be resulted;

◇Tighten the nuts and ensure that the hooks are tightly connected to the nuts and shims, and there is no phenomenon of virtual hanging;

◇After the unit is installed ensure it is secure and does not shake or sway.

10.4 Duct pipeline installation

◇Using canvas to connect between indoor unit and duct pipeline, in order to save unnecessary vibration, as to the detail connection method please refer to the following picture.

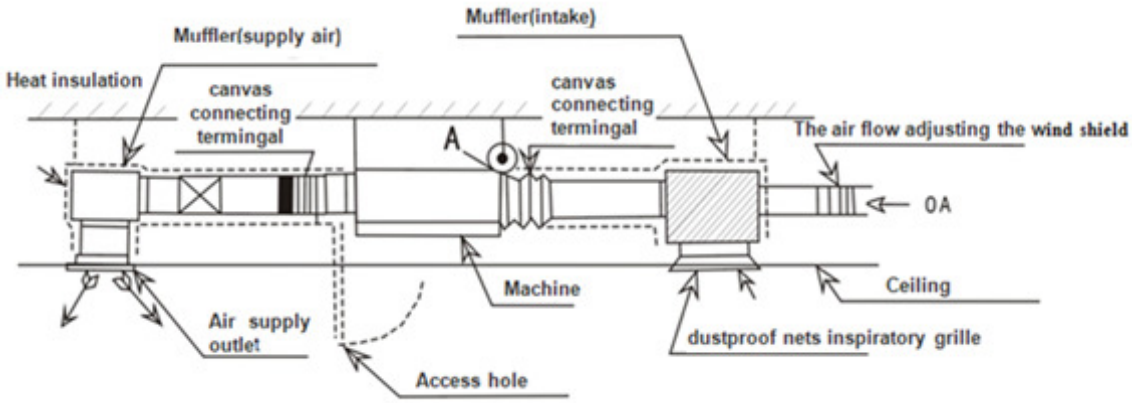

10.5 Drainage pipe installation

◇Drainage pipes must be wrapped with heat insulation materials, otherwise it will cause frost or droplets, see picture as follows:

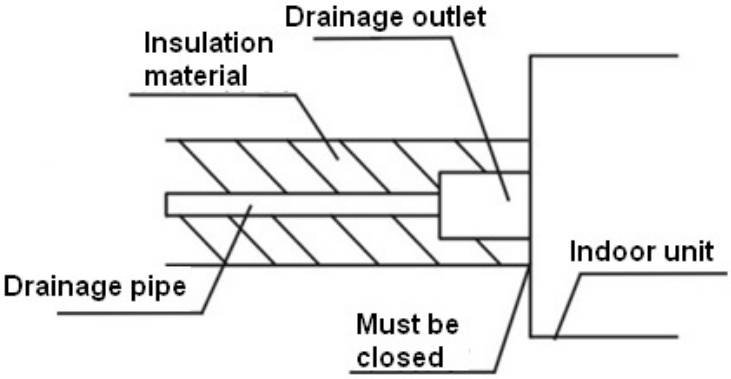

Notice：

Heat insulation material: rubber insulation pipe with the thickness of more than 8mm

◇Drainage pipe must have a downward gradient (1/50--1/100).If the drain pipe is installed ups and downs, it will cause water backflow or leakage etc.

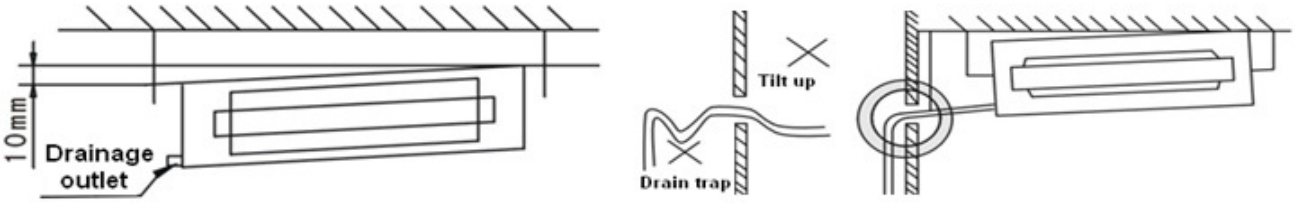

◇When finish installation please carry out the drainage test to ensure that the water flow through the pipeline fluently, and carefully observe the junction to ensure that there is no water leakage at the junction. If the unit is installed in the newly built house, strongly recommend that this test taken before the ceiling installation. Even it is the heating only unit, this test is unavoidable.

10.6 Remote controller receiver installation.

◇Installation site: recommend that the receiver is mounted with the distance of 30~50 cm to the indoor unit air outlet (on your choice as well), while must ensure that the receiver can get the signal that the remote controller sends, please refer to the following installation picture:

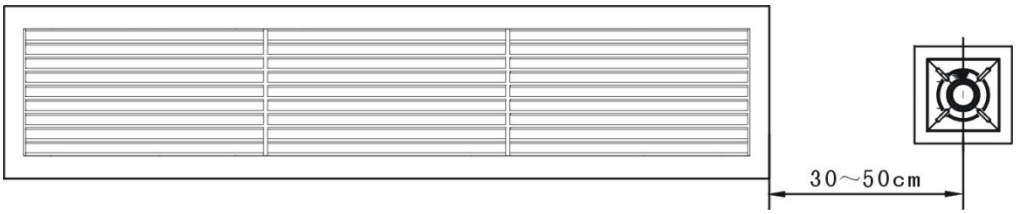

Notes:

The remote control signal effectively work for straight line from 8 meters, when the battery after the power consumption, effective work will shorten the distance.

◇Mounting hole set up: please use certain instrument to dig a square hole with 88x88mm on the ceiling

◇Remote controller receiver installation.

Hold the two sides (with clip sides) of the receiver, set the spring clip in the vertical way then put it into the mounting hole, if the two sides of the receiver is in the same level with the ceiling the installation is finished.

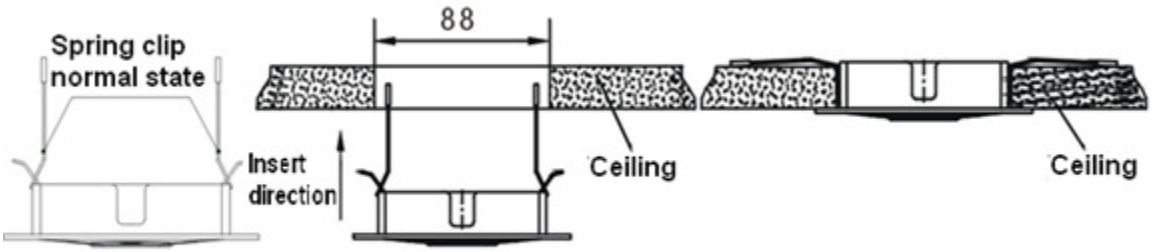

◇Signal line connection: connect the wire of remote controller receiver to the CN-DISP terminal board on PCB of indoor unit wire box then fix it.

11.Exploded View

ARVHD-H112/4R1A, ARVHD-H125/4R1A, ARVHD-H140/4R1A, ARVHD-H150/4R1A

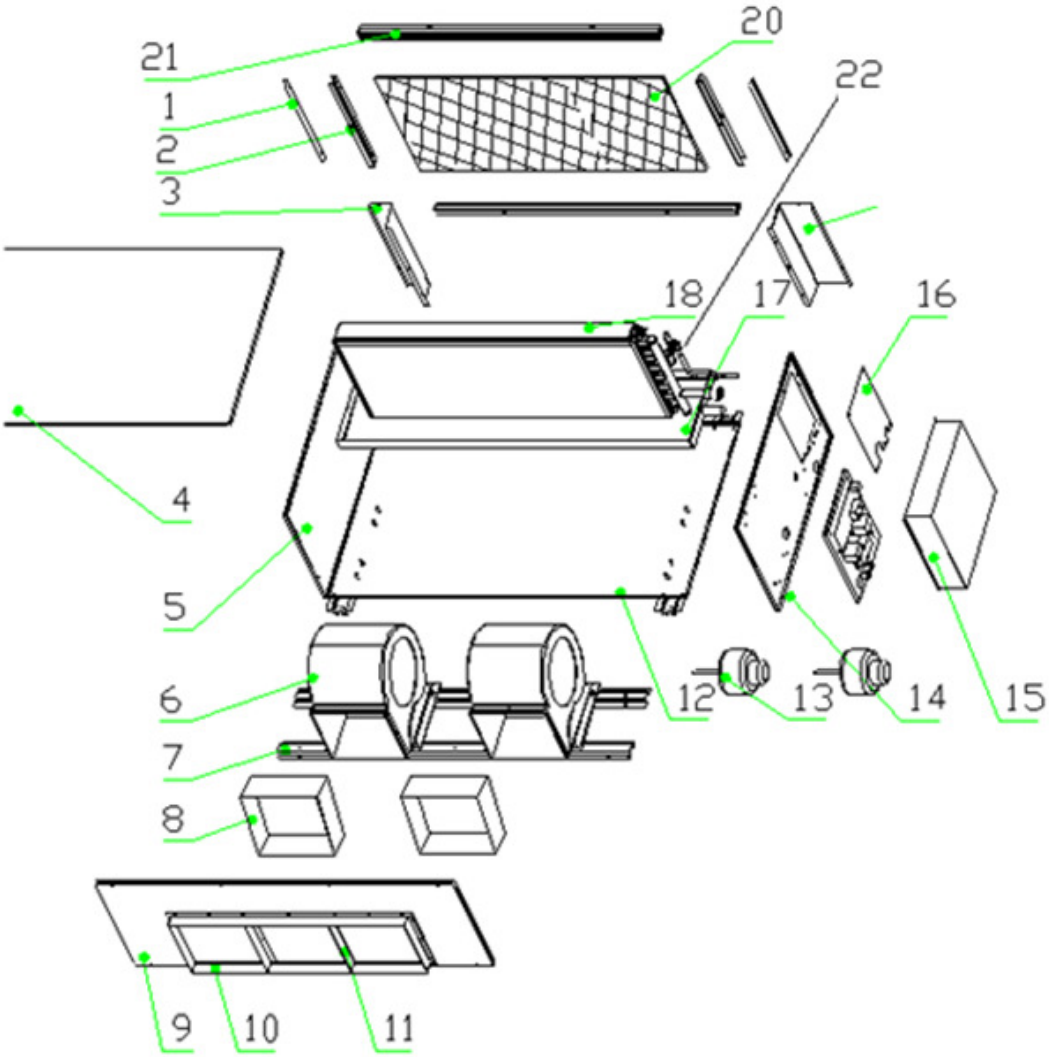

ARVHD-H112/4R1A, ARVHD-H125/4R1A, ARVHD-H140/4R1A, ARVHD-H150/4R1A

N0.	AUX code	Chinese name	Part Name	Quantity	Unit
1	16421032000042	空气过滤门 1	Air filtration door1	2	Pcs
2	16421023000032	进风框竖条	Into wind box erect bar	2	Pcs
3	16421001000186	侧板左连接板	Endplates left linking slab	1	Pc
4	16421005000120	顶盖板	Top cover	1	Pc
5	16421001000184	左侧板	Left board	1	Pc
6	16444005000003	离心风轮组件 SYZ7-7I	Centrifugal rotor components SYZ7-7I	2	Sets
7	16321009000091	风机固定架组件	Fan fixed frame components	2	Sets
7.1	16421002000094	风机固定条	Fan stents	2	Pcs
7.2	16445999000015	六角头螺栓(不锈钢)M6*20 GB5783	Hexagon bolts (stainless steel) M6*20 GB5783	8	Pcs
8	16432011000001	帆布软接	Canvas soft connect	2	Pcs
9	16421004000114	出风面板	The wind panel	1	Pc
10	16421030000085	出风法兰 A	Exhaust flange A	2	Pcs
11	16421030000087	出风法兰 B	Exhaust flangeB	4	Pcs
12	16321009000097	底盘组件	Chassis components	1	Set
12.1	16421027000009	底脚	Bottom feet	4	Pcs
12.2	16421028000049	底盘	Chassis	1	Pc
12.3	16445999000015	六角头螺栓(不锈钢)M6*20 GB5783	Hexagon bolts (stainless steel) M6*20 GB5783	8	Pcs
13	16430001000126	电机 YDK200-4	Motor YDK200-4	2	Pcs
14	16421001000185	右侧板	Right board	1	Pc
15	16322009000035	电控盒总成	Electric control box assembly	1	Set
15.1	16421038000036	电控盒盖	Electric control box incautiously	1	Pc
15.2	16421005000122	电控盒底板	Electric control box floor	1	Pc
15.3	11222009001192	R控制板 FGJ(H)-RQD-3F-SYE2	R panel FGJ (H) - RQD - 3F - SYE2	1	Pc
15.4	16430007000046	传感器 5K3470 XH2 0.6m(铜壳)	Sensor 5K3470 XH2 0.6 m (copper)	1	Pc
15.5	16430007000102	传感器 5K3470 XH2 1.2m(塑封)	XH2 1.2 m (5K3470 encapsulation)	1	Pc
15.6	16427001000003	端子板 5 位(600V 4mm2)IV	Terminal board 5 (600V 4mm2) IV	1	Pc
15.7	16430015000012	(ROHS)电容 10Uf/450V AC	(ROHS) 10Uf / 450V AC capacitance	2	Pcs
15.8	16422005000017	(ROHS)变压器 TDB-8-B(PTC)	(ROHS) transformer TDB-large - 8 - B (PTC)	2	Pcs
16	16421014000020	阀板	disc	1	Pc
17	16421034000047	接水盘	Wet pan	1	Pc
18	16324009000049	蒸发器总成	Evaporator assembly	1	Set
18.1	16324009000050	蒸发器组件	Evaporator components	1	Set
18.2	16325009000070	蒸发器铜管套件	Evaporator brass suite	1	Set
19	16421001000187	侧板右连接板	Endplates right linking slab	1	Pc
20	16444013000006	空气过滤器	Air filter	1	Pc
21	16321009000090	滑槽组件 1	Sliding channel component 1	2	Sets
21.1	16421032000054	滑槽	Sliding channel	2	Pcs
21.2	16421023000022	进风框横条	Into wind box stripes	2	Pcs
22	16421023000022	电子膨胀阀	EXV	1	Pc

ARVHD-H220/4R1A, ARVHD-H280/4R1A

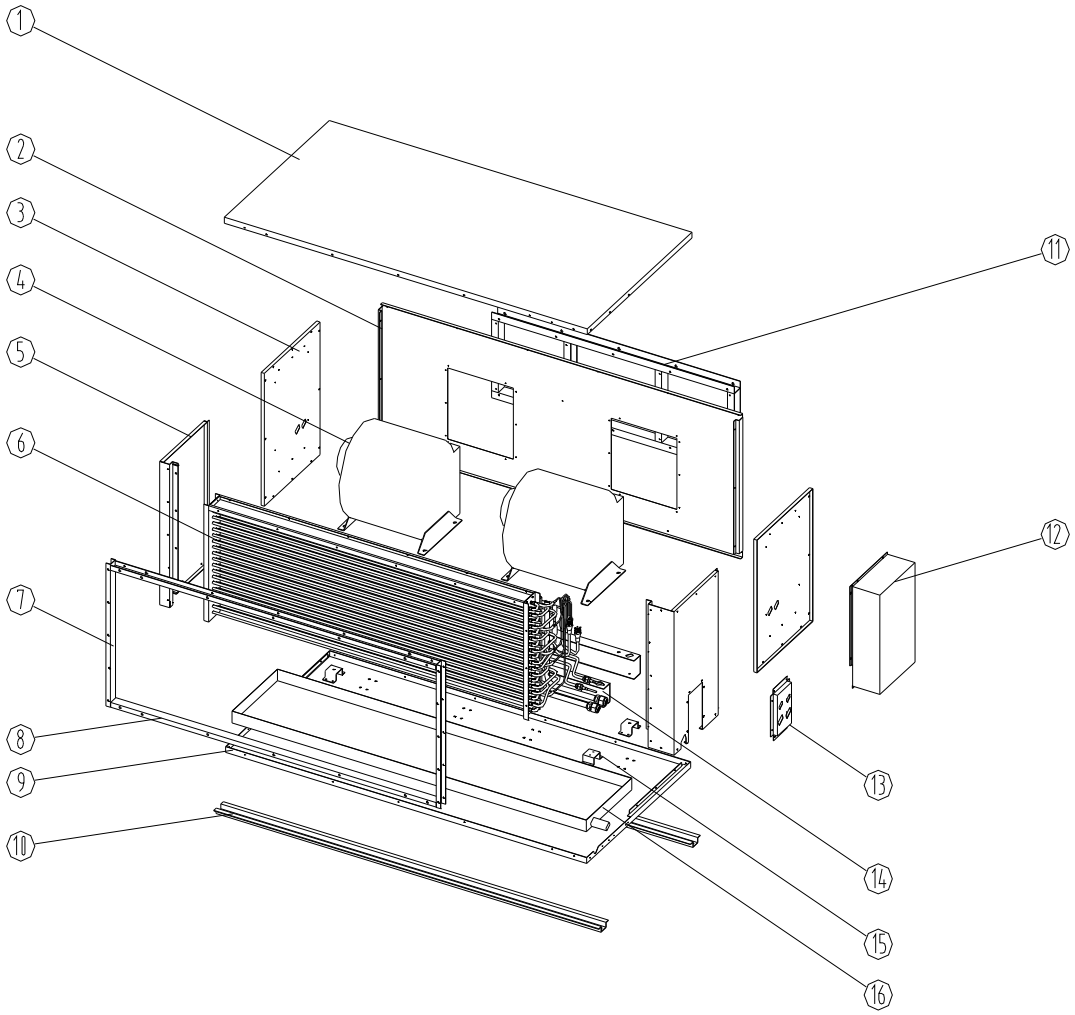

ARVHD-H220/4R1A, ARVHD-H280/4R1A

N0.	AUX code	Chinese name	Part Name	Quantity	Unit
1	16321009000068	顶盖板	Top cover	1	Pc
2	16321001000029	出风面板组件	The wind panel	1	Pc
3	16321004000023	检修板组件 B	Repair board components B	2	Pc
4	16444005000171	离心风轮组件 SYZ8-8I	Centrifugal rotor components SYZ8-8I	2	Sets
5	16321009000067	右侧板组件	Right board component	1	Set
6	16324001000104	蒸发器总成	Evaporator assembly	1	Set
7	16421023000018	进风框竖条 A	Into wind box erect bar A	2	Pcs
8	16321009000070	进风框横条组件	Into wind box stripes components	2	Sets
9	16421028000073	底盘	Chassis	1	Pc
10	16421022000081	底脚	Bottom feet	2	Pcs
11	16321001000030	出风框组件	out wind box stripes component	1	Set
12	16322001000069	电控盒总成	Electric control box assembly	1	Set
13	16321009000071	阀板组件	disc component	1	Set
14	16421002000311	风机固定架	Fan stents	2	Pcs
15	16321009000054	风机固定架组件	Fan fixed frame components	2	Sets
16	16331001000041	接水盘组件	Wet pan component	1	Pc

ARVHD-H450/5R1A,ARVHD-H560/5R1A

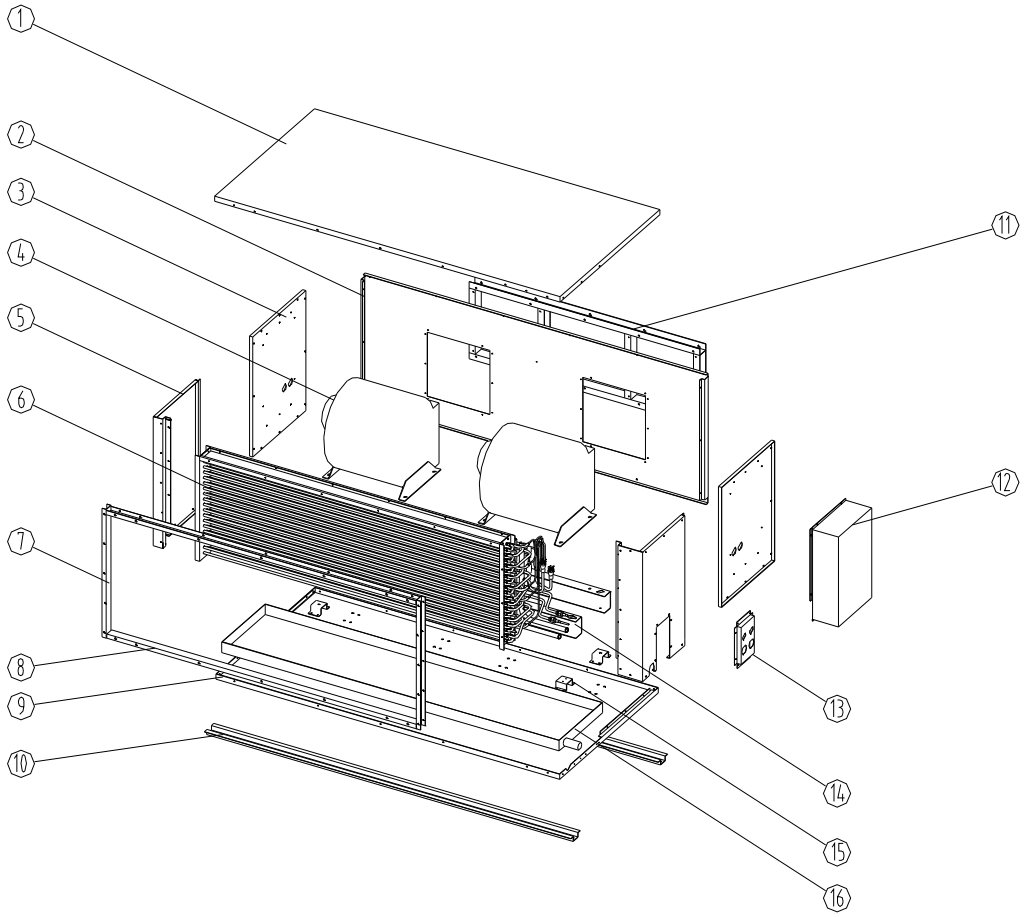

N0.	AUX code	Chinese name	Part Name	Quantity	Unit
1	16321009000084	顶盖板组件	Top cover components	1	Pc
2	16321009000083	出风面板组件	The wind panel	1	Pc
3	16321004000024	检修板组件	Repair board components	2	Pc
4	16444005000027	离心风机组件	Centrifugal rotor components	2	Sets
5	16321009000076	右侧板组件	Right board component	1	Set
6	16324001000102	蒸发器总成	Evaporator assembly	1	Set
7	16421023000013	进风框竖条 A	Into wind box erect bar A	2	Pcs
8	16321009000085	进风框横条组件	Into wind box stripes components	2	Sets
9	16421028000046	底盘	Chassis	1	Pc
10	16421027000008	底脚	Bottom feet	2	Pcs
11	16321009000041	出风框组件	out wind box stripes component	1	Set
12	16322001000078	电控盒总成	Electric control box assembly	1	Set
13	16321009000060	阀板组件	disc component	1	Set
14	16421026000102	风机固定架	Fan stents	2	Pcs
15	16321009000054	风机固定架组件	Fan fixed frame components	2	Sets
16	16331001000045	接水盘组件	Wet pan component	1	Pc

ARVHD-H220/4R1B, ARVHD-H280/4R1B

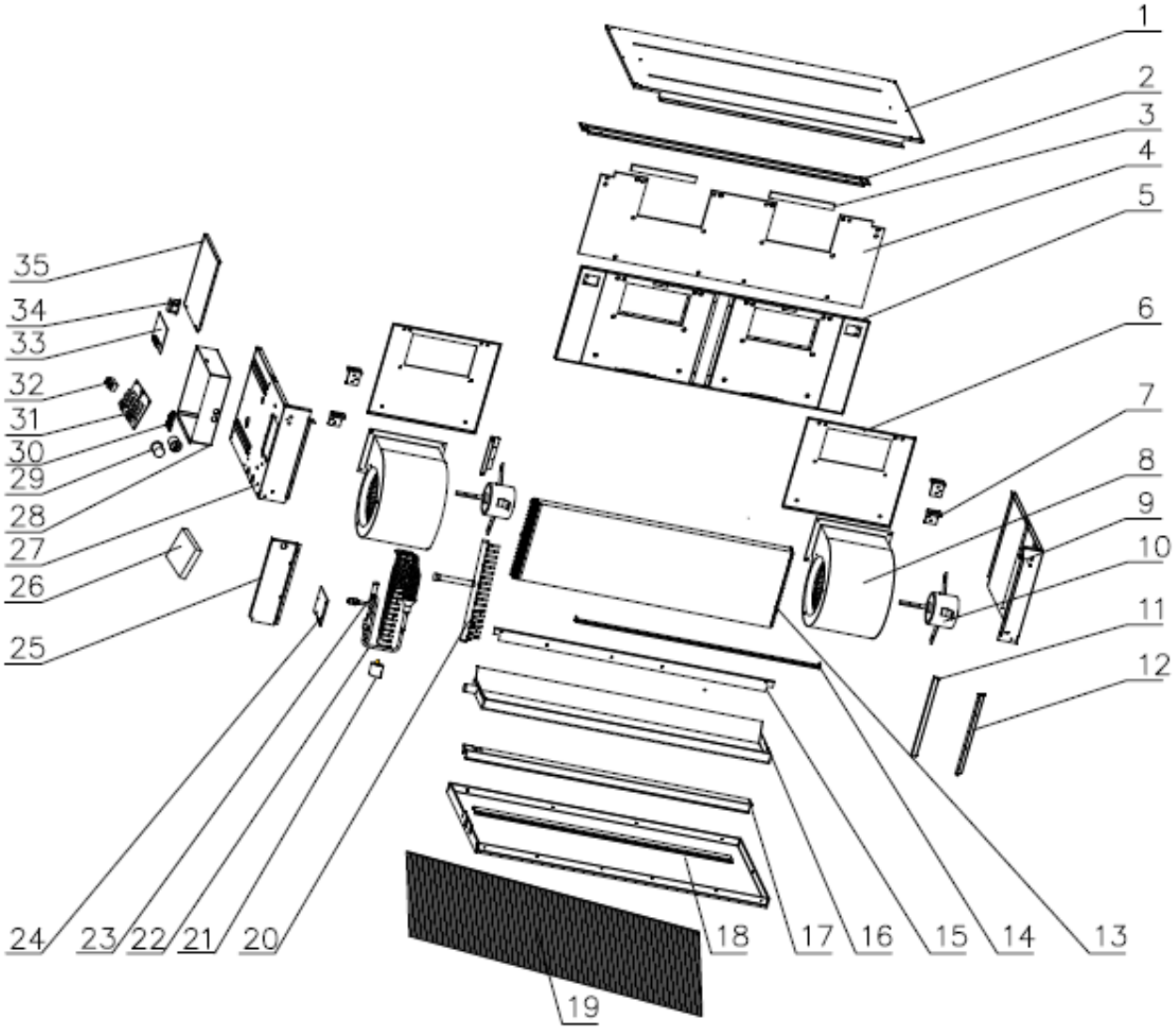

No	AUX code	Chinese name	Part Name	Quantity
1	16321009000238	顶盖安装板组件	Top cover	1
2	16421028000148	固定加强板	fixed plate	1
3	16434002000086	PE-X 保温棉板	Heat insulation cotton board	2
4	16434002000092	PE-X 保温棉板	Heat insulation cotton board	1
5	16321009000236	前面板组件	Front panel assembly	1
6	16421002000388	风机固定板	Fan fixing plate	2
7	16421040000051	挂耳	lugs	4
8	16444004000071	离心风机 SYZ9-9MD-1	centrifugal fan	2
9	16324009000206	右侧板组件	Right side plate assembly	1
10	16430001000570	电机(三速) FP320A	motor	2
11	16421026000307	进风口支架 B	Inlet bracket B	1
12	16421002000389	蒸发器左边固定板	Fixed plate on left side of evaporator	1
13	16335009000006	蒸发器组件	Evaporator assembly	1
14	16421026000306	进风口支架 A	Inlet bracket A	1

15	16421002000394	进风口固定板	Air inlet fixing plate	1
16	16321009000237	接水盘组件	Water plate assembly	1
17	16421026000305	蒸发器支架	evaporator support	1
18	16321009000235	底盘组件	Chassis components	1
19	16444013000101	缝制过滤网	sieve	1
20	16325001000265	集气管组件	Gas collecting pipe assembly	1
21	16441015000028	电子膨胀阀线圈	Electronic expansion valve coil	1
22	16325001000266	电子膨胀阀组件	Electronic expansion valve assembly	1
23	16441014000037	电子膨胀阀阀体	Electronic expansion valve body	1
24	16421013000019	检修板	service panel	1
25	16421002000414	蒸发器右边固定板	Fixed plate on right side of evaporator	1
26	16422002000006	线控器	Remote control	1
27	16321001000055	左侧板组件	Left side panel assembly	1
28	16421038000276	电控盒	electric control box	1
29	11330009000099	电容 15μ	capacitance	2
30	16427001000072	(ROHS)端子板	Terminal Board	1
31	16422001000179	控制板 FAN(AC)-3F-SYE1	panel	2
32	11220544000008	双联压线座	Terminal Board	1
33	11222542000041	CJ 控制板	panel	1
34	16422005000032	变压器	transformer	1
35	16421038000275	电控盒盖	cover of electric control box	1

12.Spare parts list

ARVHD-H112/4R1A, ARVHD-H125/4R1A, ARVHD-H140/4R1A, ARVHD-H150/4R1A

AUX code	Chinese name	Part Name	Quantity
16421032000042	空气过滤门 1	Air filtration door1	2
16421023000032	进风框竖条	Into wind box erect bar	2
16444005000003	离心风轮组件 SYZ7-7I	Centrifugal rotor components SYZ7-7I	2
16421004000114	出风面板	The wind panel	1
16421030000085	出风法兰 A	Exhaust flange A	2
16421030000087	出风法兰 B	Exhaust flangeB	4
16430001000126	电机 YDK200-4	Motor YDK200-4	2
11222009001192	R 控制板 FGJ(H)-RQD-3F-SYE2	R panel FGJ (H) - RQD - 3F - SYE2	1
16430007000046	传感器 5K3470 XH2 0.6m(铜壳)	Sensor 5K3470 XH2 0.6 m (copper)	1
16430007000102	传感器 5K3470 XH2 1.2m(塑封)	XH2 1.2 m (5K3470 encapsulation)	1
16427001000003	端子板 5 位(600V 4mm2)IV	Terminal board 5 (600V 4mm2) IV	1
16430015000012	(ROHS)电容 10Uf/450V AC	(ROHS) 10Uf / 450V AC capacitance	2
16422005000017	(ROHS)变压器 TDB-8-B(PTC)	(ROHS) transformer TDB-large - 8 - B (PTC)	2
16421034000047	接水盘	Wet pan	1
16444013000006	空气过滤器	Air filter	1
16321009000090	滑槽组件 1	Sliding channel component 1	2
16421032000054	滑槽	Sliding channel	2
16421023000022	进风框横条	Into wind box stripes	2
16421023000022	电子膨胀阀	EXV	1

ARVHD-H220/4R1A, ARVHD-H280/4R1A

AUX code	Chinese name	Part Name	Quantity
16421023000018	进风框竖条	Into wind box erect bar	2
16444005000171	离心风轮组件 SYZ8-8I	Centrifugal rotor components SYZ8-8I	2
16421004000267	出风面板	The wind panel	1
16422001000092	控制板 DCZ-SN3F-SYE2(R8C)	panel DCZ-SN3F-SYE2(R8C)	1
16430007000018	温度传感器 20K3950 XH2 蓝 1.2m 铜壳 2(组件)	Sensor 20K3950XH2 1.2 m (copper2)	1
16430007000005	温度传感器 15K3950 XH2 白 0.9m 塑封 1(组件)	XH2 0.9 m (15K3950 encapsulation)	1
16427001000010	端子板 5 位(600V 4mm2)AB	Terminal board 5 (600V 4mm2) AB	1
16430015000012	(ROHS)电容 10Uf/450V AC	(ROHS) 10Uf / 450V AC capacitance	2
16422005000009	(ROHS)变压器 TDB-14-B2B	(ROHS) transformer TDB-large - 14 – B2B	2
16421034000045	接水盘	Wet pan	1
16444013000039	空气过滤器	Air filter	1
16421032000039	滑槽	Sliding channel	2
16421023000017	进风框横条	Into wind box stripes	2
16441014000003	电子膨胀阀	EXV	2

ARVHD-H450/5R1A, ARVHD-H560/5R1A

AUX code	Chinese name	Part Name	Quantity
16421023000013	进风框竖条 A	Into wind box erect barA	2
16444005000027	离心风机组件	Centrifugal rotor components	2
16421004000112	出风面板	The wind panel	1
11222047000031	CJR 控制板 DCZ-SN3F(R8C)-SYE2	CJR panel DCZ-SN3F(R8C)-SYE2	1
16430007000018	传感器 20K3950 XH2 蓝 1.2m 铜壳 2	Sensor 20K3950 XH2 1.2 m (copper 2)	1
16430007000005	传感器 15K3950 XH2 白 0.9m 塑封 1	Sensor 15K3950 XH20.9m (encapsulation1)	1
16427001000059	(ROHS)端子板 7 位(600V 4mm2)	Terminal board 7 (600V 4mm2)	1

16422005000009	(ROHS)变压器 TDB-14-B2B	(ROHS) transformer TDB-14-B2B	2
16421034000059	接水盘	Wet pan	1
16444013000041	空气过滤器 1848×774×10	Air filter 1848×774×10	1
16421032000041	滑槽	Sliding channel	2
16421023000021	进风框横条	Into wind box stripes	2
16441014000015	电子膨胀阀阀体 DPF(Q)3.2(R410a)	EXV DPF(Q)3.2(R410a)	1

•Consulting service

——Service hotlines are built in company headquarter and each marketing center to accept consumers' consultancy.

•Training and Technology Support

——If consumer has technology questions about air conditioning, please contact our company. We will supply training and technology support on air conditioning system using and management to consumer for free.

•After-sale system

——If air conditioning system occurs problem, consumers could dial the headquarter's hotline or local contributing repair net point's tel., maintenance personnel will arrive at the spot and solve the problem in 24 hours.

•Return visit and following service

——According to the situation of sold products and custom service, our company supplies effective return visit and following service.

• Contents supplied in the document may be changed without further notice for products' improvement

• The document is just for reference while it has been proofreaded many times to assure accuracy. Everything takes the material object、nameplate and instructions as.